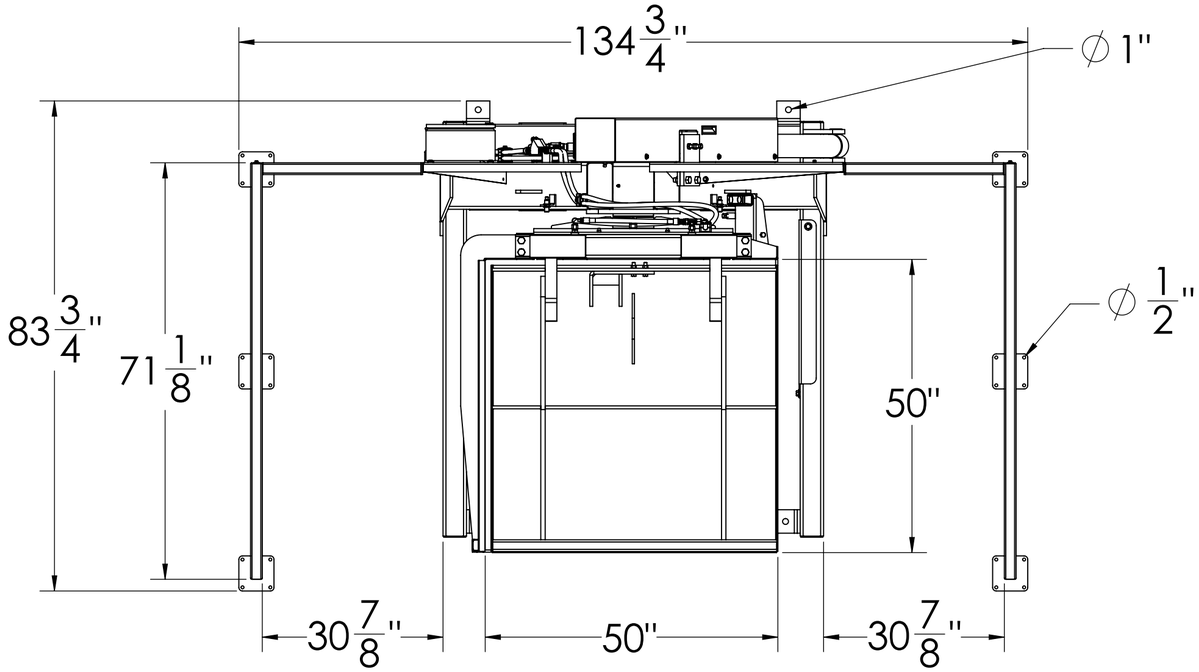


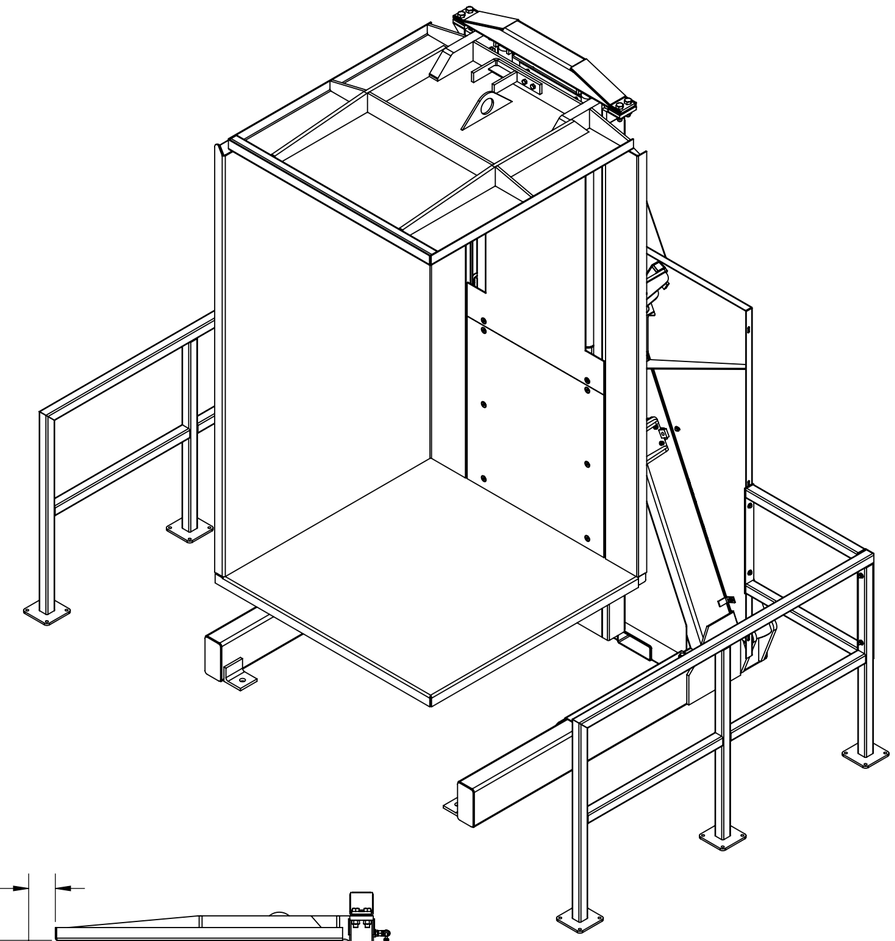

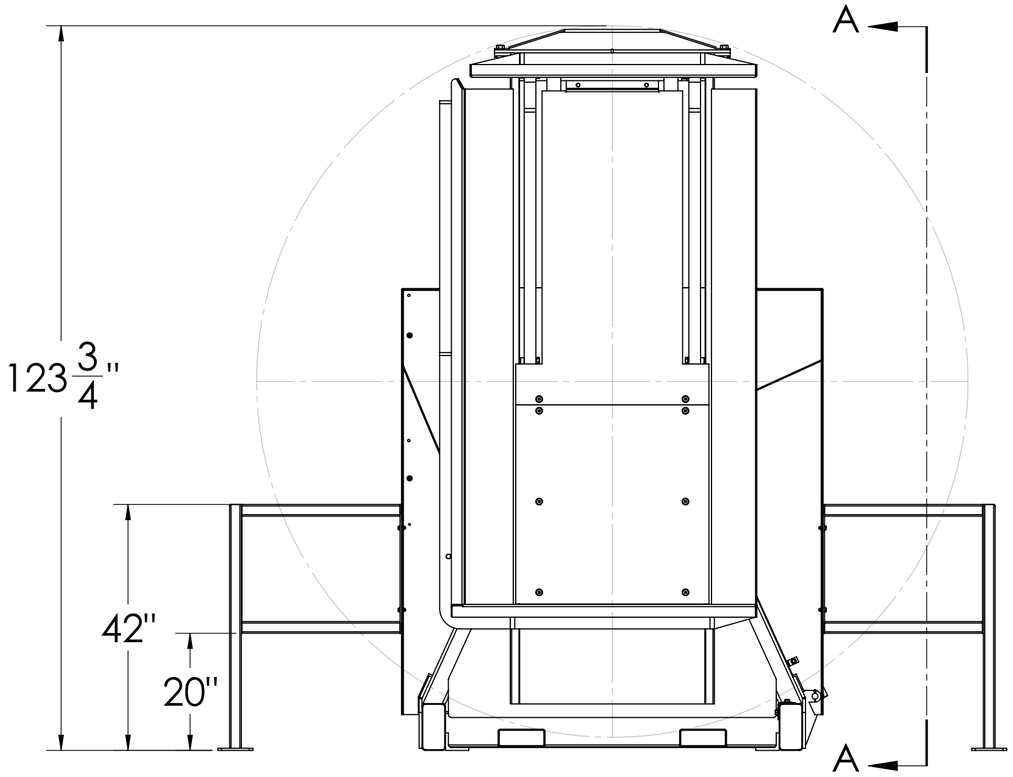


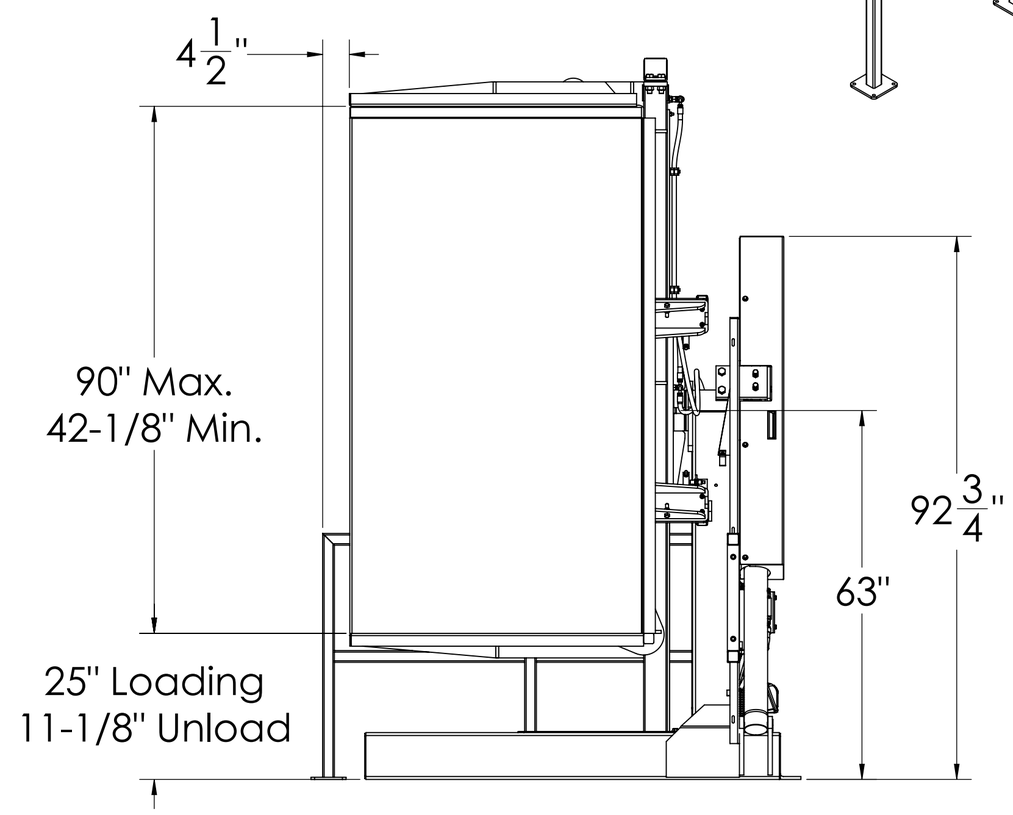


Approval Print
Cherry's Industrial Equipment

Date Sent:_____

- ☐ APPROVED. PROCEED WITH FABRICATION
- ☐ APPROVED AS NOTED. PROCEED WITH FABRICATION. FURNISH REVISED PRINTS
- ☐ REVISE AS NOTED. RE-SUBMIT FOR APPROVAL. DO NOT FABRICATE.

| VOLTAGE OPTIONS (Not all options are applicable for all machines) | | |
|---|---|---|
| ☐ | 110V 1 Phase | (LDD/LDI/LDT) |
| ☐ | 220V 1 Phase | (DC/GL/LDI/PC/PSR/SC) |
| ☐ | 230V 3 Phase | (ALL) |
| ☐ | 460V 3 Phase | (ALL) |
| ☐ | 575V 3 Phase | (ALL) |

Tolerances Unless Otherwise Specified

Decimals: 0.X = +/- 0.1, 0.XX = +/- 0.01, 0.XXX = +/- 0.005
Angle: +/- 1
Fraction: +/- 1/4

This drawing is confidential and is supplied on the express condition that it is not copied or communicated to other persons or companies

Do not scale - If in doubt, ask

Please inform if modifications are made during manufacture

Third Angle Projection

All Units in Inches

| # | Date | By |
|---|---|---|
| Notes | | |

Drawing Revisions

SC-90P Single Clamp Inverter
Standard Rail Guarding

CHERRY'S Industrial Equipment®

600 Morse Ave. • Elk Grove Village, IL 60007
SALES: 800.350.0011 • SERVICE: 877.350.2748

| | |
|---|---|
| Date: | 11/11/2017 |
| Drawn By: | RJL |
| Checked By: | RJL |
| Material: | PCS |
| Weight: | 3800 lbs. Aprx. |
| Drawing #: | SC-90P-GR |