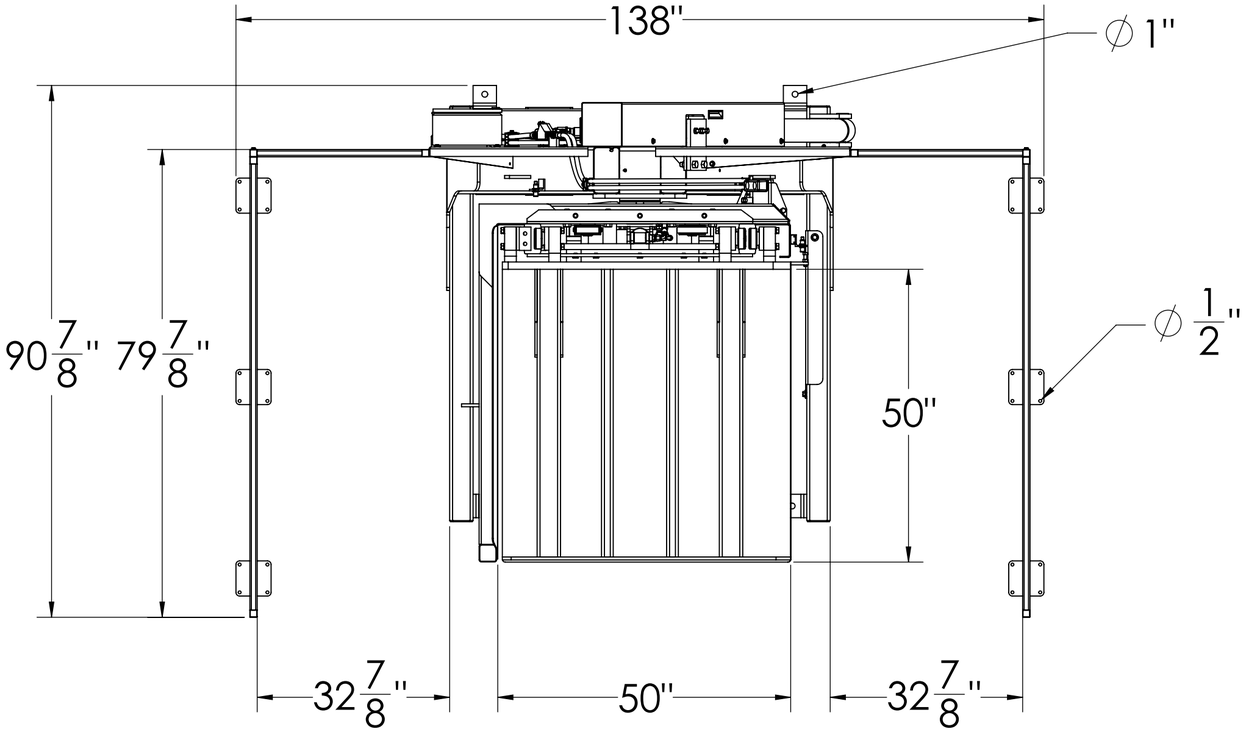

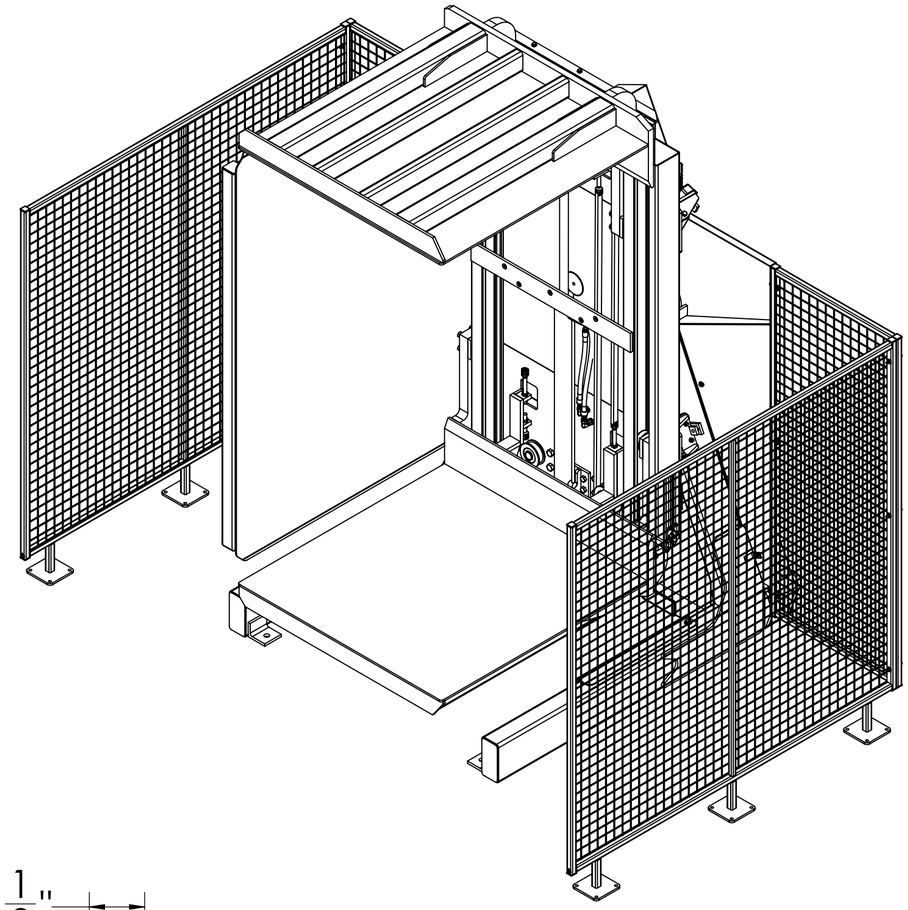

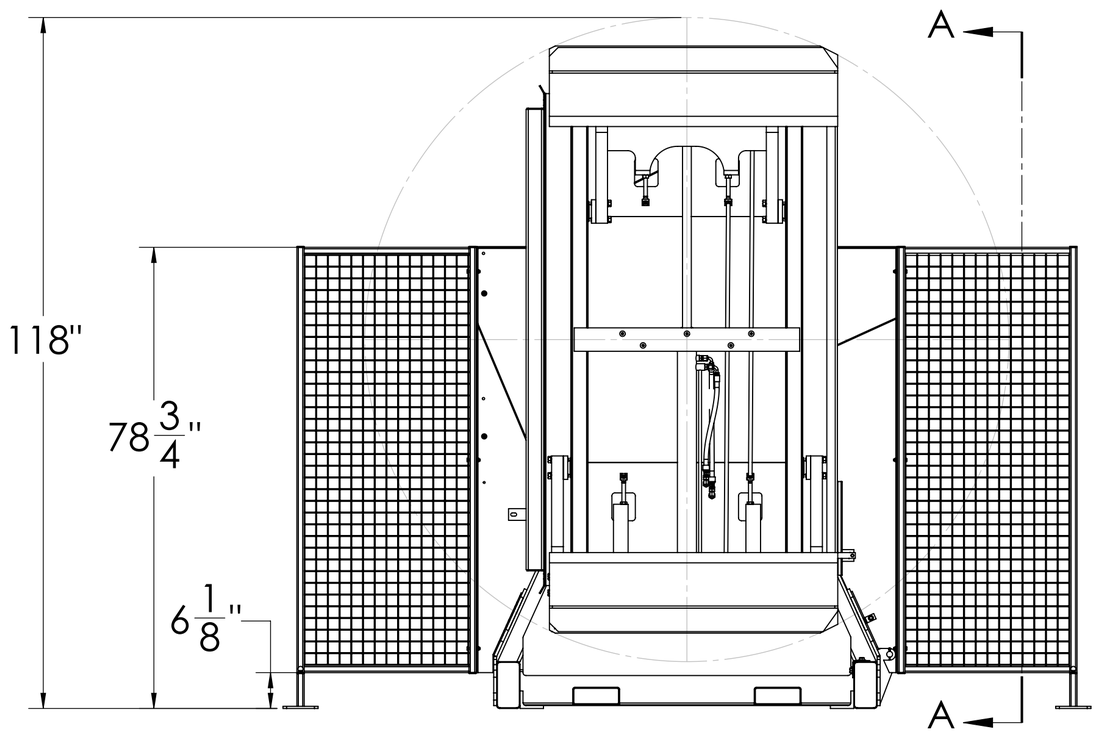

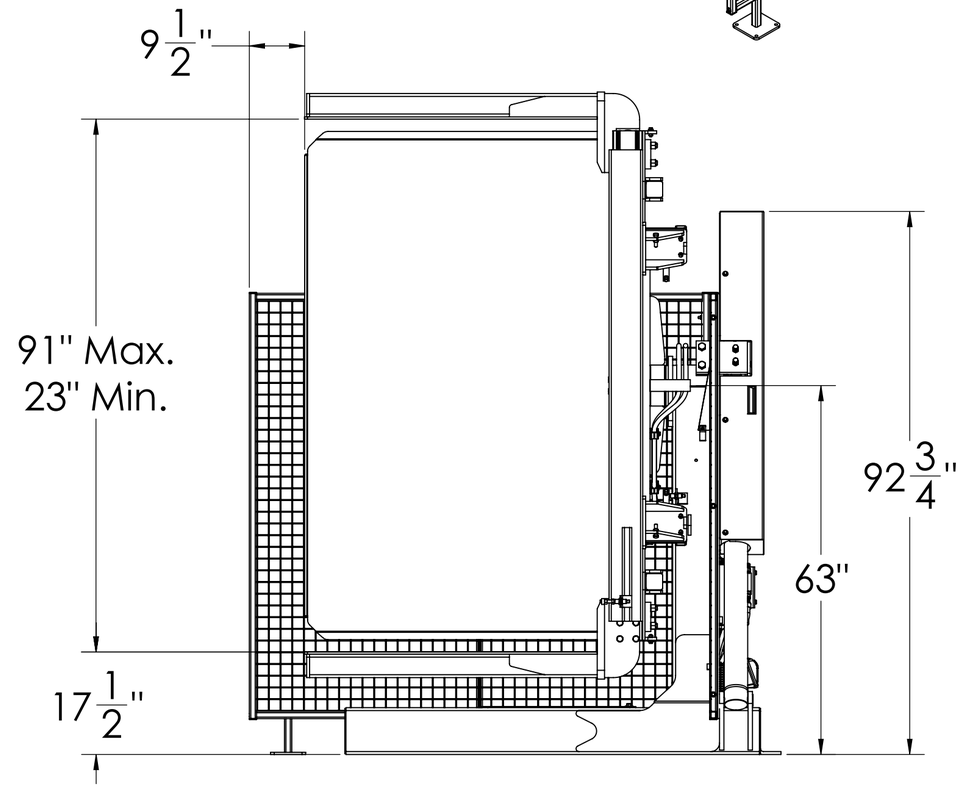

Approval Print
Cherry's Industrial Equipment

Date Sent:_____

- ☐ APPROVED. PROCEED WITH FABRICATION
- ☐ APPROVED AS NOTED. PROCEED WITH FABRICATION. FURNISH REVISED PRINTS
- ☐ REVISE AS NOTED. RE-SUBMIT FOR APPROVAL. DO NOT FABRICATE.

VOLTAGE OPTIONS (Not all options are applicable for all machines)		
☐	110V 1 Phase	(LDD/LDI/LDT)
☐	220V 1 Phase	(DC/GL/LDI/PC/PSR/SC)
☐	230V 3 Phase	(ALL)
☐	460V 3 Phase	(ALL)
☐	575V 3 Phase	(ALL)

Tolerances Unless Otherwise Specified

Decimals: 0.X = +/- 0.1, 0.XX = +/- 0.01, 0.XXX = +/- 0.005
Angle: +/- 1
Fraction: +/- 1/4

This drawing is confidential and is supplied on the express condition that it is not copied or communicated to other persons or companies

Do not scale - If in doubt, ask

Please inform if modifications are made during manufacture

Third Angle Projection

All Units in Inches

#	Date	By

Notes

Drawing Revisions

DC-91P Dual Clamp Inverter
High Style Guarding

CHERRY'S Industrial Equipment®
600 Morse Ave. • Elk Grove Village, IL 60007
SALES: 800.350.0011 • SERVICE: 877.350.2748

Date:	10/12/2017
Drawn By:	RJL
Checked By:	RJL
Material:	PCS
Weight:	5300 lbs. Aprx.
Drawing #:	DC-91P-HSG